REVISION			
LTR	DESCRIPTION	DATE	APP

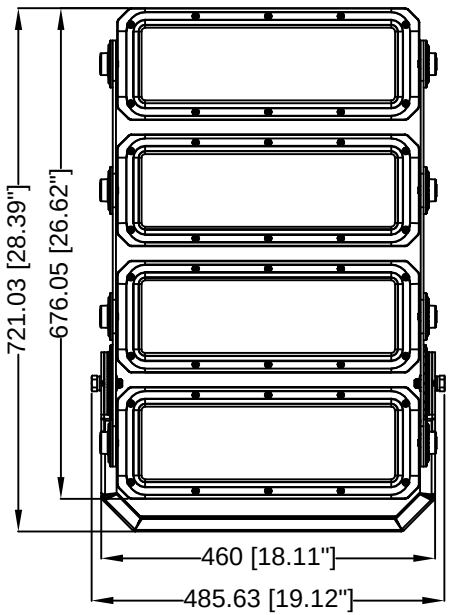

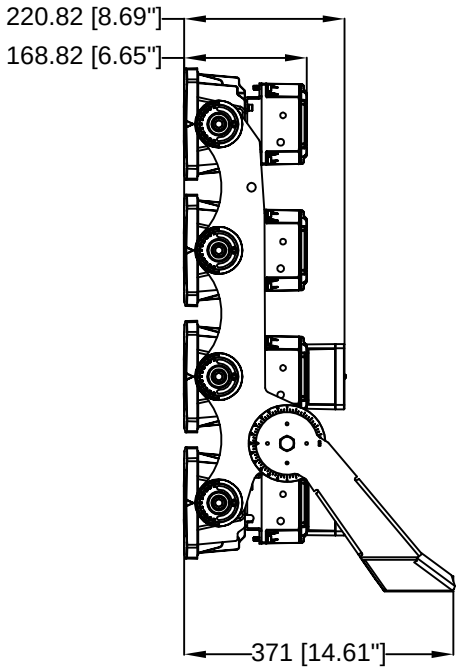

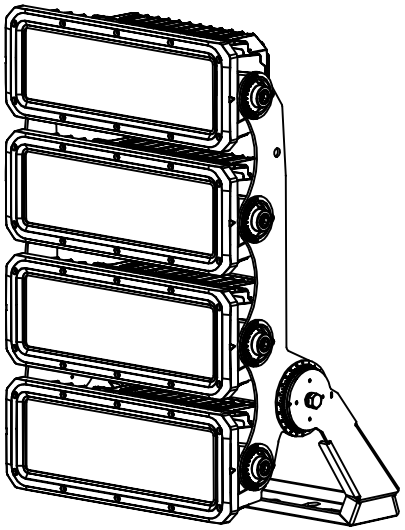

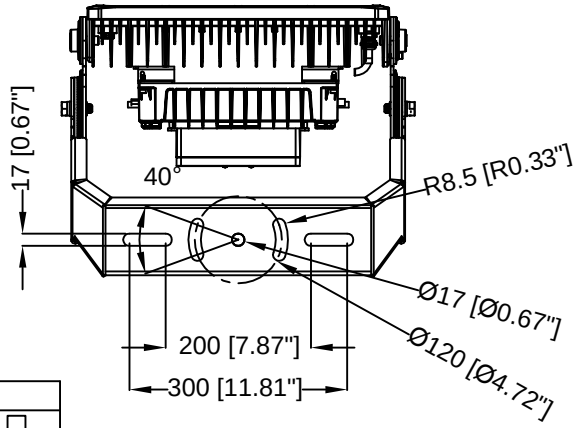

DIMENSION CLASSIFICATION
* : CRITICAL

TOLERACNE TABLE			
TOL GRADE	□	■	□
0-25	±0.10	±0.20	±0.50
25-80	±0.15	±0.30	±1.00
80-250	±0.20	±0.50	±2.00
250-	±0.30	±0.80	±3.00
ANGLE	±1.0°	±1.5°	±2.0°